When installing onto a timber upstand kerb, it is essential that the aluminium rooflight internal kerb aligns correctly with the internal face of the upstand. For a typical width of 70.0 mm, the aluminium kerb should finish flush or with a slight external overhang, (~11.5mm) as shown in the image below. This allows the flashing membrane to be applied correctly and enables rainwater run off cleanly over the aluminium frame and down the external face of the kerb.
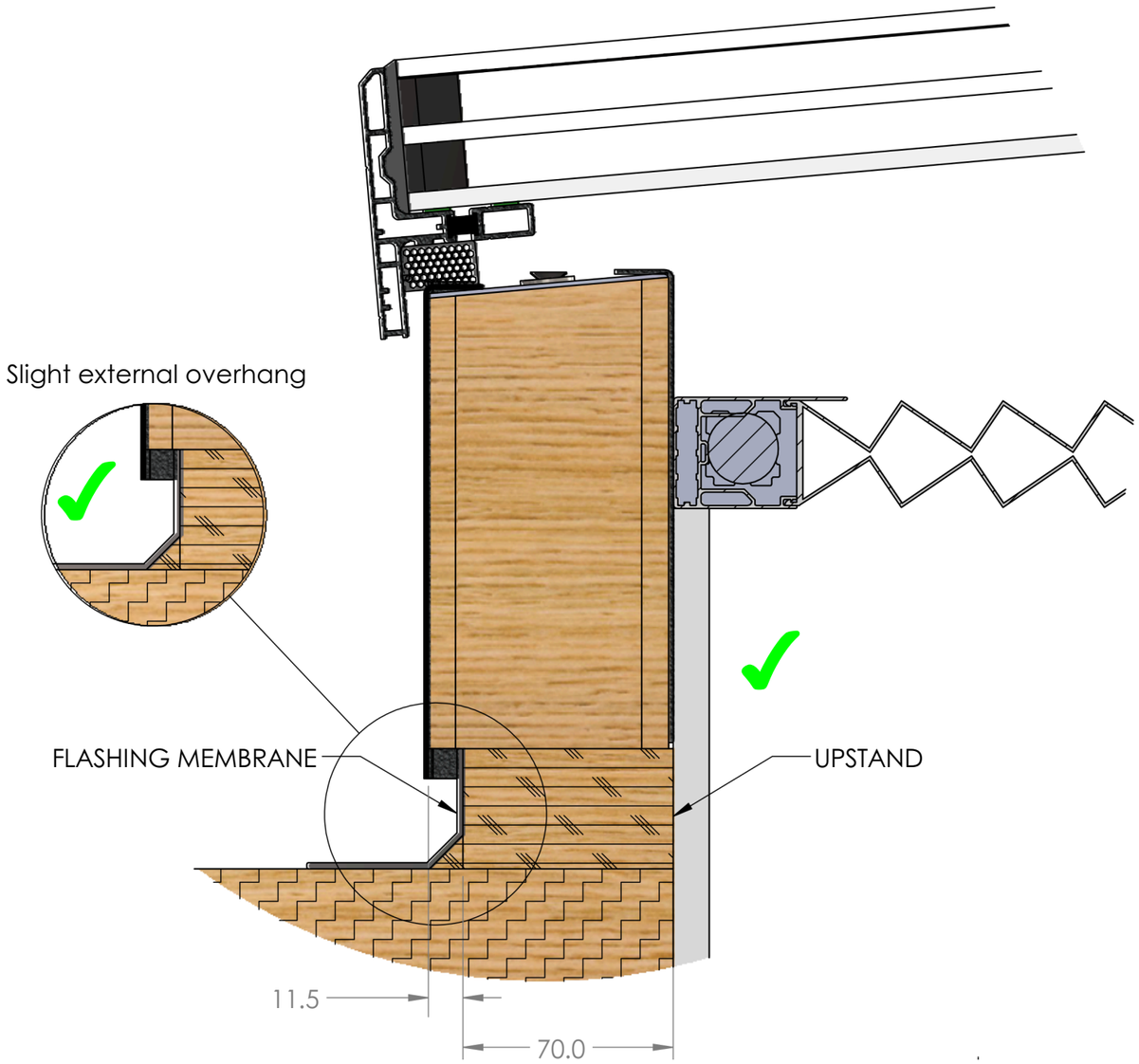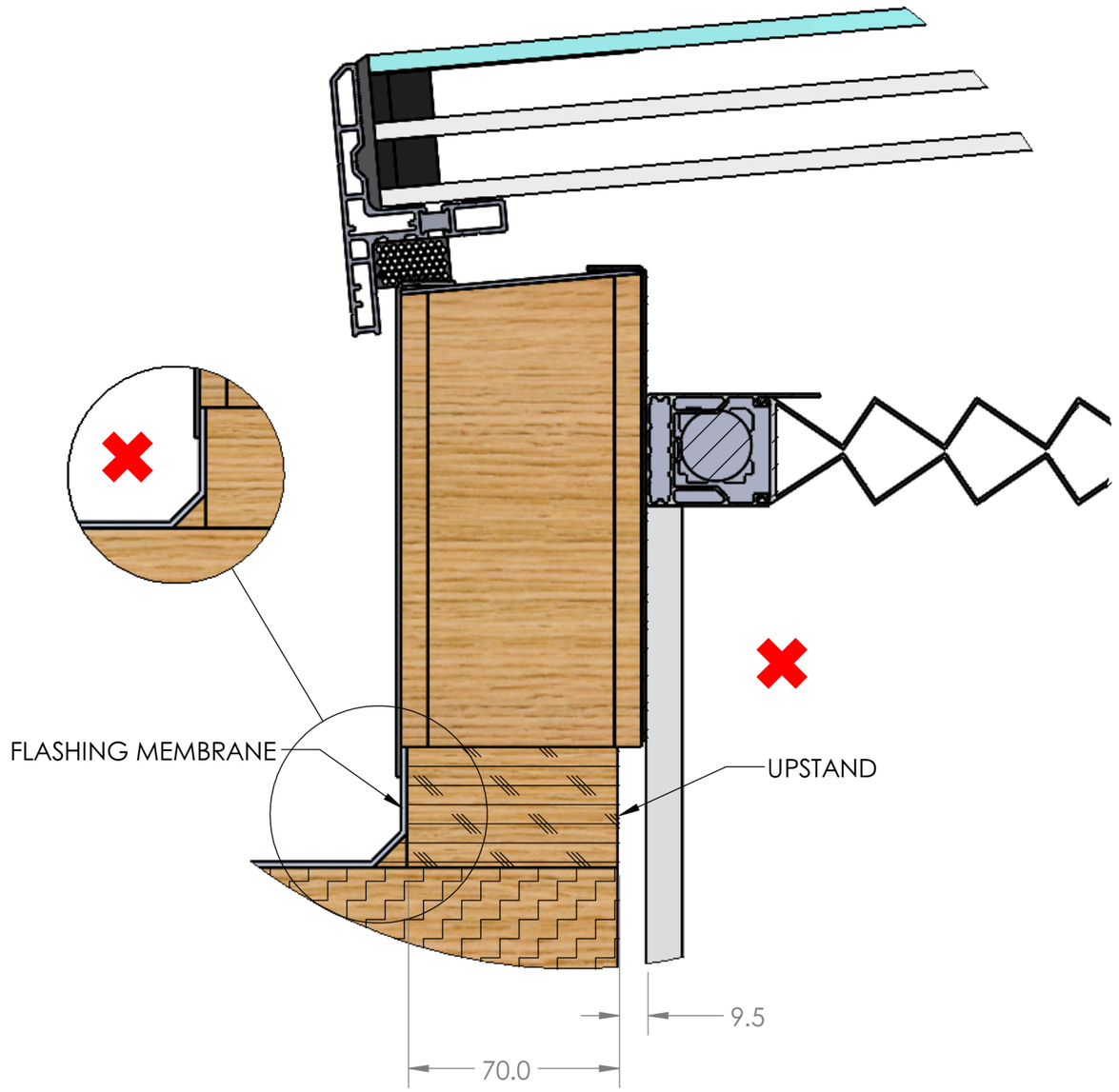
If the aluminium kerb is set back, creating an internal step (e.g. 9.5 mm offset), this results in an incorrect installation. Such a configuration disrupts water run-off and can lead to water pooling at the interface. This increases the risk of water ingress and reduces overall weatherproofing performance.